N	Part Description	No. off	From	Until
6515	Coupling 1¾" bore 5"			
6520	Nut M10	4		
6530	Bolt M10 × 30	4		
6540	Oil cooler DD	1		
6550	Oil cooler reduction	1opt		
6560	Pipe connector	2		
6570	Cooler straps	2		
6610	Connection hose	2		
6640	Water pipe cooler/pump	1		
6650	Oil pipe cooler/gearbox	2		
6660	BW 2/1 Box	1opt		
6661	AS71CR 1.5/1 red			
6662	AS71CR 1.9/1 red RH			
6663	AS71CR 2.6/1 red 5" cplg			
6670	Instruction book	1		
6680	Bolt 20" Bearer	4opt		
6700	Hurth gearbox 2/1	1		
6701	Hurth gearbox 3/1			
6710	Flywheel Hurth	1		
6720	Spring drive	1		1242.8
6721	Spring drive plate	1		1243.8
6740	Adaptor plate	1		1242.8
6741	Hurth adaptor	1		1243.8
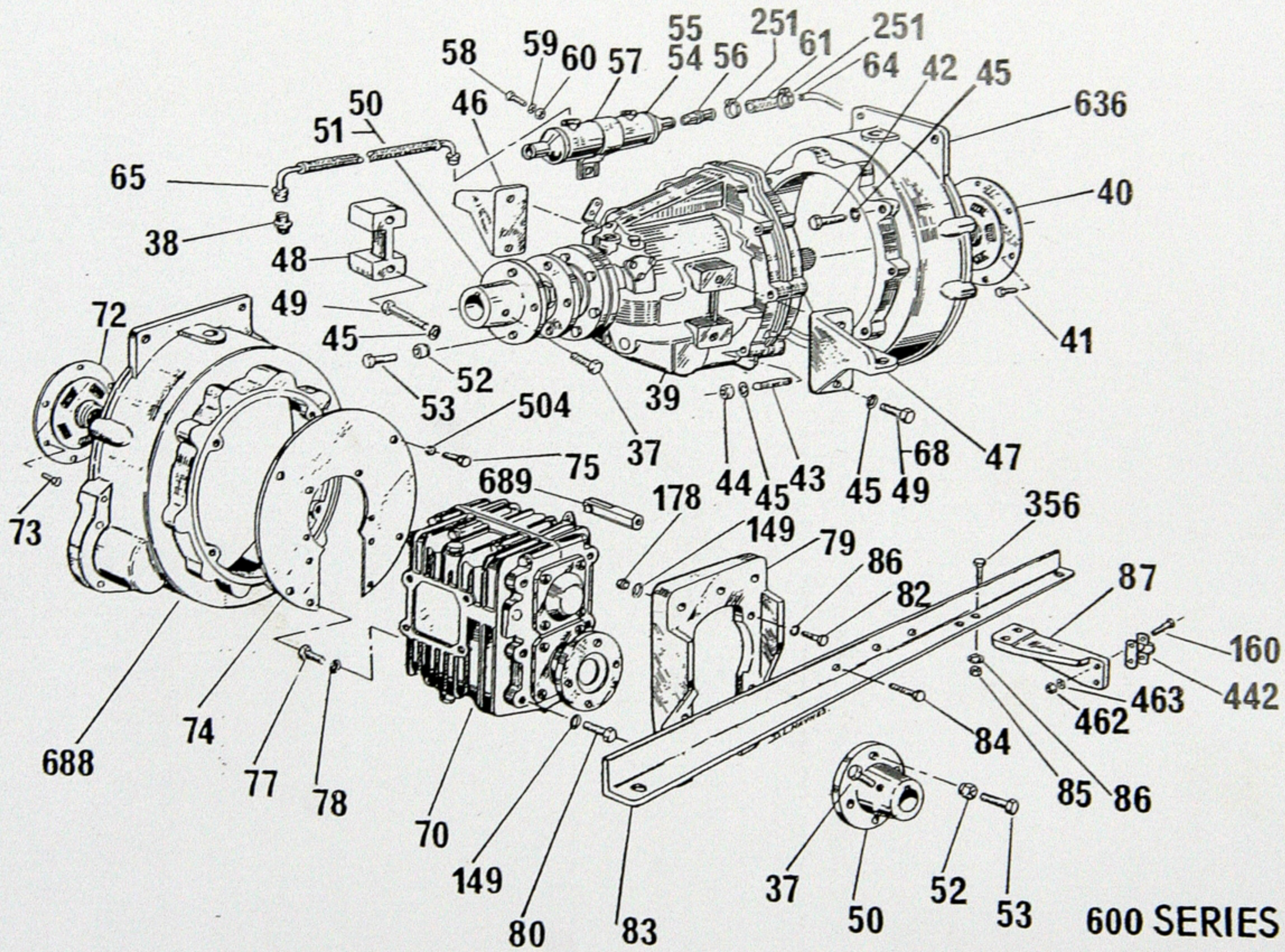
N	Part Description	No. off	From	Until
6790	Aft bearer adaptor	1		
6800	Bolts for adaptor M8C × 20	4		
6820	Bolts for adaptor M8C × 30	8		
6830	Bearer arm 20" centre	1		
6831	Bearer arm Hurth 16⅞			
6840	Bearer arm bolts 5/16 UNC ½	3		
6870	Morse reaction bracket	1opt		
6880	Flywheel housing Hurth	–		1242.8
6890	Hurth Clevis			
7010	Seal for N344	1		
7020	Stud	4		
7050	Stub shaft key	1		
7060	Stud (stub shaft)	6		
7070	Nut (stub shaft)	6		
7080	Stub shaft	1		
7090		1	1457.9	
7100	Set joints/seals			
7110	Set hoses			
7120	9900 pump kit			
7130	Head joint set			
7150	Z adaptor			
7170	Workshop manual	1